WHY CRYSTAL FILTERS?

Crystal filters consume zero dc power, cost very little, can have small signal losses while being extremely selective, and are almost impossible to overload. What more could a QRP enthusiast ask for?

How about easy to make? Sorry. It's tedious at first, "easy" comes with practice. But in the end you can make filters that money can't buy.

This paper assumes some familiarity with the ladder topology presented by Hayward[1]. It incorporates his work and expands filter making capability by explaining the concept of meshes then showing a simple method to "tune up" a finished filter.

I have underlined crucial concepts to make them easier to see. I'll be talking about:

Basic circuit ideas : meshes
How to characterize crystals more accurately
How to MOVE a crystal frequency
Hayward's software
Impedance matching
An alignment method for a completed filter
Filter shape choices and their Q requirements
A sample : a 16-pole SSB filter

BASICS OF COUPLED SERIES-RESONANT TUNED CIRCUITS and MESHES

First a little theory about "meshes". Having this idea firmly rooted will make things seem more logical as we progress.

An LC tuned circuit is also called a "resonator". <u>Two LC tuned circuits, coupled together by a common impedance, forms a "coupled resonator" filter</u>. Figure 1 is shows the schematic and frequency response of pair of 3.9 MHz series-tuned circuits with a coil Q of 200, coupled by a 1000 pF shunt capacitor and with 50 ohm source (antenna) and load (receiver).

I said the tuned circuits were resonant at 3.9 MHz but it looks like the filter has minimum loss at a frequency slightly lower than 4.1 MHz. Why aren't they the same?

If we temporarily disconnect the tuned circuit on the right, we are left with a closed circular path called a <u>"mesh"</u>. Our LC resonator is in series with the components to ground on the left end and the right end. In this case, a 50 ohm resistor on the left, a 1000 pF capacitor on the right. The equivalent capacitance of 100 and 1000 pF in series is 90.9 pF, and <u>the resonant frequency of 90.9 pF in series with 16.65 uH is 4.09 MHz, and that's the center frequency of our filter</u>. The 50 ohm resistance lowers the Q, but doesn't change the resonant frequency.

If there were three resonators, the one in the middle will have coupling capacitors to ground on each end. In this case the LC, in series with both of these capacitors, will be resonant at the center frequency of the filter.

This is generally true. Figure 2 shows a 5-pole 3.8-3.9 MHz filter designed by Geffe's bandpass filter program, "BAND"[2]. Note how the LC resonator's capacitor in each mesh has a slightly different value; it's precisely what is required to be resonant at the filter's center frequency.

Whether a filter is Chebychev, Butterworth, Bessel, Gaussian or Legendre every mesh should be resonant at the center frequency of the filter. From this elegant theoretical concept comes this crucial cut-and-try rule: tune each MESH to the same (center) frequency. Despite the coupling capacitors being off a little (and of course they will be), and your coil inductance not being quite right (and of course it won't be), tweak the resonator (either its coil or capacitor) until you get the mesh resonant at the filter center frequency.

The "Dishal" method of resonating filters has been around a long time[3]. It's wonderfully elegant but is easier to write about than use. I'll show you a way to resonate each mesh individually. With reasonably close component values for coupling and good crystal parameters you will find the filter response is very close to the theoretical shape.

CRYSTALS, CRYSTAL TESTERS

A crystal can be modeled as a series RLC circuit, just like the RLC of the 80 meter bandpass filter I just discussed. Knowing R,L and C is absolutely necessary to *design* filters. Crystal testers described in ham articles[4] let us find these values, but their accuracy, especially for high-Q crystals, is not as good as it should be. A better tester permits us to make better filters.

Figure 3 is the schematic of my crystal tester. It accepts an external signal of about 0.1 volt RMS, amplifies it by 10 dB with a one-transistor "final amp" and heavily filters the output to remove error-causing harmonics. Its 50 ohm output impedance is transformed to 12.5 ohms in a 2:1 wideband transformer, then three 1% resistors drive the crystal with a well known and low source resistance of 2.25 ohms.

The other side of the crystal is terminated with a pair of parallel 4.99 ohm 1% resistors to ground (again, very low) and coupled to the first stage of an Analog Devices AD600 amplifier so this lead of the crystal "sees" a well known and low load resistance of 2.43 ohms. The total resistance that appears in the mesh with the crystal is 2.43 + 2.25 = 4.68 ohms

The amplifier output is coupled to the second AD600 stage through an accurate 3 dB switched attenuator using two groups of three 1% resistors from my junkbox.

A normal signal generator does not have enough bandspread and is not stable enough to test high Q crystals which may have only 10-20 Hz between the two 3 dB frequencies. A VCO, using a crystal from the set, is a reasonable way to go. Steve Weber, KD1JV, makes a DDS signal generator with 0.1 Hz tuning steps^5. It saves time when you don't have to wait for ten seconds to get accurate, 0.1 Hz resolution frequency readings.

First we find the crystal resistance:

1. Find the series resonant frequency of the crystal and set the amplifier gain for a convenient output level between 0.1 and 0.2 volts RMS.

2. Replace the crystal with a cermet or metal film potentiometer such as a 100 ohm Bourns 3006P, and adjust it for <u>exactly the same</u> output. Remove the potentiometer and measure it's resistance with a DMM: this is the crystal resistance, R_S.

3. We measure the crystal loaded Q_L we find the frequencies above and below series resonance at which the amplitude response is exactly 3 dB down.

~~3.~~ Replace the crystal, open the switch and set the amplifier gain for the 0.1-0.2 volts RMS at resonance. Close the switch to short the attenuator and find the two frequencies where we again get <u>exactly</u> the same output. These are the -3 dB frequencies which I call f_1 and f_2. The loaded crystal Q is:

$$Q_L = \frac{f_1 + f_2}{2(f_1 - f_2)}$$

4. We can correct the loaded Q for the tester resistance to get the Q_U of the crystal by itself:

$$Q_U = Q_L \left(\frac{R_S + 4.71}{R_S} \right)$$

5. Now we can calculate the equivalent inductance of the crystal:

$$L = \frac{Q_U * R_S}{6.2832 * f}$$

I bought 100 HC-49 crystals from Digikey and measured their Q and series resistance. Most of the crystals were very similar and I set aside a few crystals that had Q or series resistance seriously different from the others. The remainder had an average series resistance of 19.6 ohms and an average Q of 112,000 (112K). Using the <u>average</u> Q and series resistance I can calculate the equivalent inductance of the crystals to be L = 78.87 mHy.

HOLDER CAPACITANCE

Unfortunately in parallel with the series RLC of our crystal is a capacitance of a few pF, often called "holder capacitance". Although small, it is hundreds of times larger than the series "C" of the crystal and it makes the crystal parallel resonant, a very high impedance, at a frequency slightly above the series resonant frequency.

Our 80 meter LC filter was quite symmetrical, but crystal *holder capacitance* causes the crystal to become parallel resonant on the high side of this kind of ladder filter, putting a "notch" in the filter, making the selectivity curve and making the passband less symmetrical; that's why this type of filter is called a "lower sideband" filter. The concepts seen in the simple LC bandpass filter still apply but the shape becomes more more seriously asymmetrical the closer the wider the filter becomes. X

Hayward's "X" software tries to compensate for the notch without any attention from us. It will show what you can do with the crystals you have. But be aware that filters that are a large percentage of the crystal frequency may not be possible in simple ladder filters. If you have no choice, see Hayward's sorta-solution[6].

MEASURING HOLDER CAPACITANCE

We need to be able to measure capacitances of a few pF with reasonable accuracy, say to 0.1 pF. Luckily that's not very difficult because with a frequency counter even small capacitors will move an oscillator an easily measurable amount. Build "The LC Tester[7]"

The capacitances of a crystal can be described with three smaller capacitors. One is the capacitance between the two leads ("holder capacitance"), and two others capacitances from each lead to the case. When the case is not grounded the lead-to-case capacitors are in series and add to the holder capacitance making, it bigger. <u>RULE: ALWAYS GROUND THE CRYSTAL CASE IN YOUR FILTERS</u>

The lead-to-case capacitances will be very similar. Short the two crystal leads together, measure their combined capacitance to the case, and assign half of it to each lead. For my crystals I measured 1.6 pF and said each lead has 0.8 pF to the case.

With the case not grounded I measured 3.4 pF between the leads. The two 0.8 pF are in series and are 0.4 pF of this capacitance, leaving 3.0 pF as true holder capacitance. I am going to ground the case and must subtract 0.8 pF for each crystal connected to a node. If I have a computed coupling capacitor of 39.7 pF, the actual capacitor I will want is:

$$C = 39.7 \text{ pF} - 0.8 \text{ pF} - 0.8 \text{ pF} = 38.1 \text{ pF}$$

Figure 4 shows the complete crystal model; I now have R_S, L and capacitances, the information I need to do filter computations.

"MOVING" CRYSTALS (SLIGHTLY) TO BE WHERE YOU WANT THEM

Before someone starts an argument, we are NOT moving the crystal either up or down, any more than we are tuning an antenna with an antenna tuner. But by putting a capacitor or inductor in series it LOOKS like it moved. You can't GET away with moving them very far. Some rules of thumb:

X

Don't try to move a crystal up with a capacitor more than .01% of its frequency. For example, a 4434 KHz crystal should not be moved more than 4434 x .00001 = 443 Hz.

Don't try to move a crystal down with an inductor more than .005% of its frequency. For example a 4434 KHz crystal should not be moved more than 4434 x .0005 = 222 Hz.

How do you decide what the capacitor value should be to move series resonance up a specific amount? You can make an educated guess with this simple arithmetic:

$$C_t = \frac{C_1 * 2 * f_o}{2 * freqshift}$$

where: C_t = the tuning capacitor
C_1 = motional capacitance of the crystal
f_o = nominal crystal frequency
freqshift = how far you want to move

Holder capacitances typically run 3-4 pF. Get *very* wary when this formula indicates C_t is less than 100 pF. You are pushing the limits of how far you can pad a crystal.

How to you decide what the inductor value should be to move resonance down? This educated guess takes the form of:

$$L_t = \frac{L_m * 2 * freqshift}{f_o}$$

where: L_m = motional inductance of the crystal

Once you have the inductance estimate consult Amidons databook[8], choose a toroid size and material to make the highest Q inductor you can. This isn't a VFO inductor, stability of ferrite is fine and high permeability is essential .Use -61 ferrite (u=125) with crystals in the low HF range (3-5 MHz) and -63 ferrite (u=40) for crystals in the high HF range (8+ MHz). A -37 or even -50 size is useful so you have room for a few more turns later.

Put the crystal and the series capacitor or inductor back into the crystal tester and see that it moved the amount you needed. If not, adjust the L or C a little to put it where you need it. Consider this "coarse tuning", later I'll show how to tune the finished filter.

HAYWARD'S LADDER ANALYSIS PROGRAMS

Wes Hayward sold a collection of ladder-circuit analysis programs called *LADPAC* that did the tedious calculations for many RF circuit designs, among them crystal filters, on an IBM PC/compatible computer. It was pricey for the casual designer. Now those programs are available bound in the back of his book *Introduction to RF Design*, available from the ARRL. It's a rare bargain.

Hayward's software takes the holder capacitance into account, compensating to a large extent for that notch above the passband. So in addition to the Q and R_s of our crystals, we need to know the crystal "holder capacitance". If we measure the crystal L's and C's and get the computed coupling and end capacitors within 3-5% the resulting filter will have nearly a textbook shape.

APPROACHES TO USING THE SOFTWARE

"X" computes the capacitors required for a filter after it knows the coupling required between every resonator ("k") and the coupling to the input and output loads (end-Q, "q"). There are four ways to deal with this need-to-know:

(a) "X" already knows them for Butterworth or Cohn filters.
(b) You to enter "k" and "end-q" numbers from "predistorted filter design tables which can be found in Zverev and probably other filter books for some filter types. This is needed when your crystal Q is not very high, you need to take that finite Q into account (advanced topic[9]).
(c) You first run Hayward's "L" program, which computes k-q values for Chebychev filters.
(d) You first run Hayward's "L" program, type in the LC values for a lowpass filter from a filter book like Zverev[10], and let it compute k-q values.

I'm going to describe design of a Chebychev filter, taking option (c).

THE "L" PROGRAM

1. I sit down at my PC, type "L" to start the *L* program, and it presents me with some choices.
2. I type "K" to choose the option of putting the coupling coefficients and end q of our 1 ohm-1 radian prototype on disk.
3. It asks me to "Enter order of filter", to which I respond "16" (that's 16 crystals!!). Since computers can't laugh, it proceeds to ask me to...
4. "Enter the Chebychev ripple in dB". I entered 0.1 dB, low ripple compared to commercial filters which often have good fractions of 1 dB, but for a given crystal Q choosing less ripple will give less insertion loss.

These first four steps were quick and easy; what happened is a mouthful: "L" has stored the coupling coefficients, k, and the end q for a 1 ohm, 1 radian 16-pole Chebychev "prototype" 16-pole Chebychev filter on the disk.

THE "X" PROGRAM

5. I type *X* to start the crystal filter design program. It presents me with a list of choices.
6. I type K to load the prototype filter we just designed
7. It prompts me to enter the number of meshes, but already shows (16) because that's what the prototype file has. I just hit the RETURN key.
8. It prompts me to enter the approximate crystal frequency in megahertz. I enter 4.434.
9. It prompts me for the inductance in henries: I enter .07887
10. It prompts me for the overtone number. I accept 1 for garden variety HF crystals.
11. It prompts me to the "holder" capacitance, with a calculation of it's best guess. I ignore its guess, entering my measured value of 3.0 pF (case grounded!).
12. It prompts for crystal Q_U in thousands. I enter 112. It feeds back to me the average crystal resistance, and I compare that number to the 19.6 ohms I measured, as a double check on my work.
13. Now it prompts for end Qs and coupling coefficients, filter math that has been computed in the file generated by "L". All we have to do is repeatedly press "enter" and watch the numbers go by.
14. It prompts for bandwidth. I type 2300. It feeds back the "Normalized Q", which we don't need.
15. It prompts to a source impedance level. There is an impedance at which the end crystal is hooked directly to the source. In this filter that resistance is about 500 ohms. If we try to use a lower value than this, it refuses: we can't make the filter impedance lower and get the 2300 Hz bandwidth. If we make it higher than 500 the program puts a capacitor in parallel with the load resistance.

    I like 50 ohms and choose 800 ohms, thinking a 1:4 transformer will convert 50 to 50*4*4 = 800 ohms. There are an infinite number of other choices; for example 1500 ohms (to connect to a NE602). L-networks, computed by another Hayward program, "ZMAT", can match to any oddball filter impedance. First time through, don't worry about impedance other than being above the minimum.

16. It prompts for a load impedance level. Same comments as 15 above and I use 800 again.
17. It now gives the coupling capacitors (that go to ground from the intersection of two crystals). They vary from 33.2 to 41.9 pF, and there is 12.1 pF at each end.
18. After a keypress the next screen gives a list of "Offset to tune": one mesh will have zero offset, in this case the zero offset is the two crystals next to the input and output ends. They are the lowest crystal frequencies in the filter. A nonzero offsets for the other crystals tell you how many cycles higher they must be with respect to this lowest frequency, "zero" frequency crystal.

> These offset frequencies are what is required for each mesh to have the same resonance, given the coupling capacitor sizes that are on each side of the crystal. Put another way, it is a crystal frequency offset that will compensate for the coupling capacitors to get the same mesh resonant frequency.

It took many long hours to measure all the crystals and obtain the average R_S and Q. It will take more long hours to build the filter. But, thanks to Hayward the tedious mathematics of filter design is completed in just a few minutes.

Save the computed filter design to the disk. Now type "GPLA" followed by "R" to load the just-computed design back into GPLA for analysis. Press "P", followed by "G" to get a gain plot. I changed the default limits it chooses for the plot, showing only 5 KHz spread and ~~120~~ 80 dB of attenuation. The result is shown in figure 5.

GPLA predicts 2.25 dB of insertion loss. Compare that to 10 dB for my TR-7 SSB filter. GPLA predicts about 1.9 KHz wide at -3 dB, a little narrower than requested. GPLA predicts 3.1 KHz wide at -60 dB and about 4 KHz wide at ~~-120~~ -80 dB. We can go back to "X" and start over there again, or go ahead and build it.

Does this look like the resulting filter might be worth making? Does it need more selectivity (more crystals)? Does the spread from 0 to the highest offset frequency match the set of crystals you have?

IMPEDANCE MATCHING

In step 15, we got to choose a filter impedance. It needs to be above some minimum that "X" will show you. The first time through don't worry about impedance: just let it finish the design so you can see a graph of the selectivity and see if it does what you want. Making an impedance change will not change the selectivity curve, so after you like the selectivity you can go back and change the impedance.

The same filter characteristic will be produced by ANY impedance above X's minimum. The impedance level, the bandwidth and the crystal spread are all related. Your first concern should be choosing an impedance whose set of crystal offsets match the crystals in your possession. If they don't match up, or come very close, try another impedance level and see how the spread matches up; only resort to tuning crystals as a last resort.

After matching a design to your set of crystals, realize that higher impedance gives smaller capacitors. This usually makes wide bandwidth SSB filters more difficult to build.

Transformers wound on BN61-202 "balun" cores have high coupling, and their leakage inductance can be resonated at the filter frequency with a fixed capacitor, making them nearly ideal RF transformers. I like them. But like any transformer you are limited by turns ratio to a limited number of choices.

Another method of impedance matching is to us an L or pi network. Hayward's ZMAT program will calculate the component values for a matching network you choose.

BACK TO THEORY FOR A MOMENT

Before building this filter, I'll mention something the "X" program put on the screen along with the offset frequencies for each crystal. It gave a number for "Highest Mesh Frequency". This is the resonant frequency of *every* mesh in the filter; the word "highest" should not be there, this the **THE** Mesh Frequency.

It's about 2 Khz higher than the series resonant frequency of the lowest crystal. But remember the mesh frequency is moved up by the coupling capacitors on each side; in this case two 20-50 pF capacitors, one on each side, are in series with each crystal, and it's no big surprise their series resonance has been moved up that much.

FINE TUNING

If you want the filter to be right there's no room for sloppy work or misteaks. It's best not to leave anything to chance after all this work. Fine tuning is both a "double check" and a simple, bulletproof way to "tune up" the finished filter. Always breadboard your filter and be prepared to fine tune it.

I use my crystal tester as source and detector. I use two identical transformers wound on Amidon BN43-2402 "balun" cores. Each has one 4 turns of #30 wire for one winding, one turn for the other. Wire sizes aren't critical as long as they fit in the little core. To tune a mesh, a one-turn transformer winding is placed in series with each of the crystal leads as in figure 6.

Notice how the adjacent crystals are left with one end connected, and the case grounded, so the crystal-to-case capacitances are included. Including the crystal-to-case capacitance this way is nit-picking for 500 Hz filters where the coupling capacitors are hundreds of pF, nice at 100 pF, and absolutely essential when they drop to 50 pF.

Start with the mesh having "0" offset. This will have the lowest frequency crystal. Vary the frequency source for maximum output from the crystal tester. It will occur at a frequency about 2 KHz higher than the series resonant frequency of the crystal itself. Sound familiar? This is *the* mesh frequency again! Record it. We will tune ALL our meshes to this same frequency.

Now I check every other mesh: each crystal with the capacitors and crystals on its left and right sides, and make sure their resonant frequency is the same frequency we recorded from the paragraph just above. When testing the two ends of the filter, temporarily solder the chosen load resistances on the end, along with the end capacitors values computed by "X".

Each mesh should be resonant at the same frequency within perhaps 2-3% of the filter bandwidth. For example, a 500 Hz filter likes meshes to all be within 10-15 Hz. If a mesh is not that close, why not?

Did you measure that crystal frequency correctly? Did you use the right crystal for that place in the circuit? Test the frequencies of the meshes on each side of this one; if one of those is *also* off frequency in the same direction, the coupling capacitor value should be double checked or another one of that value substituted.

After all possible blunders are taken into consideration it's possible to tune crystals.

TESTING THE "FINISHED" FILTER

Once each mesh has been verified to be on the <u>same</u> frequency, test the passband of the breadboard filter. That is, check the shape of the first ten dB of the filter's selectivity.

You can again use your crystal tester for the source and detector. Since the tester just a few ohms, use a resistor equal to the design impedance, minus 2.5 ohms, from the filter INPUT to the crystal terminal going to the oscillator. Connect a second resistor from the filter OUTPUT to the crystal terminal going to the detector. For example, if your filter was designed for an impedance of 200 ohms you could use 198, or just 200 ohms.

Find the point of minimum loss. Call it zero dB, and reference all other measurements to it. You should find the little ripples are there, or maybe a little less than the choice when you were running the "L" design of a Chebychev. For wide filters the passband may "tilt" a little bit, running downhill on the HIGH end of the filter. This is the *lower sideband* effect, because of finite holder capacitance. The upper and lower corners may be rounded off more than GPLA predicted when crystal Q is not as high as you said.

These aberrations, if only a dB or so and spread over a large portion of the filter, say most of the upper half, are not a big deal. You have a filter that is better than virtually any filter you can purchase.

MY SSB FILTER

After all this thrashing around, what might a filter look like? I made a 16-pole filter SSB filter with the Digikey crystals. I chose 0.25 dB of passband ripple and higher impedance so it's not an identical design to steps 1-18. Figure 7 is the frequency response to -80 dB, plotted by Quattro from my measurements. I cannot reliably measure more than 110 dB of stopband attenuation, but visually it looks like it is still going down when it hits the noise. The passband shape is flatter and nicer than any commercial filter I've ever bought.

OTHER TEXTBOOK SHAPES

Back to theory. Major issues for our filters are selectivity and time delay. The ideal filter is a rectangular amplitude response and constant time delay. But theoretically you can't have them both at the same time.

Chebychev filters have passband "ripple", which you can specify, then drops off as quickly as theoretically possible, the best we can do to obtain the rectangular amplitude response. Chebychev is focused on selectivity at the expense of everything else. The time delay is whatever we get. Collins says our ears are not particularly sensitive to time ~~time~~ delay so I use a 16-pole Chebychev filter for SSB. Almost all SSB filters have the Chebychev shape.

Signals are delayed more at the edge of the passband of a Chebychev filter than they are at the middle. The different delay makes most CW filters ring when the signal isn't centered in the passband (our brain uses this as a tuning aid). But I hate ringing filters on CW and ringing is not necessary.

You can sacrifice some of your nice, steep skirts and in return ringing goes away. There are various filter designs that obtain constant time delay in different ways. I like the "equiripple approximation to linear phase", whose time delay wobbles, Chebychev-like in delay, around some constant value. They are focused on obtaining constant delay at the expense of selectivity, but are still reasonably good. In particular I prefer a filter that uses the "0.5 degree approximation to linear phase" filter for CW. It has constant delay even for a signal is 40 dB down on the skirt of the filter; My ears like it because it doesn't ring even from nearby QRM. It also demands less crystal Q, making narrow CW filters possible with real-world crystals.

that

that

What about RTTY? A Chebychev filter tears up the little timed pulses than make up RTTY or AMTOR or Clover signals. It's multipath-in-a-filter. On the other hand linear phase to 40 dB down on the signal goes overboard on time delay; there are no pieces of the signal that far down and my ears aren't processing the signal. A better compromise for RTTY and other digital modes is a filter designed to have constant time delay until the filter is 6 or 12 dB down, then it drops the time delay goal and switches to the Chebychev approach to make it as selective as possible. Two compromises good for RTTY/AMTOR/Clover are called Gaussian-to-6 dB and Gaussian-to-12 dB. These filters need crystal Q in between the CW and SSB filters which fits nicely with the usual 500 Hz width.

WHAT KIND OF CRYSTAL Q DO I NEED?

I would like crystals that have a Q of one million. Unfortunately I don't have a ready supply of crystals with that Q and make do with Digikey crystals, microprocessor crystals (ugh, watch out, bargain-basement uP crystals can be awful!), and one time some glass-cased hamfest crystals were very good. The minimum Q requirement is:

$$Q_{min} = \frac{f_o}{BW}$$

where f_o = center frequency, Hz, KHz or MHz
BW = bandwidth (must be in the same units)

If the Q of your crystals is exactly Q_{min} can theoretically build the filter, but it will have infinite loss. With crystal Q higher than the minimum you can build a filter with finite loss. The higher the better.

For example if you want to build a 2.1 KHz wide filter at 8 MHz, the minimum crystal Q must be 8,000,000/2100 = 3,810. Piece of cake. You can build this filter with about 3 dB of insertion loss.

If you want the bandwidth to be 500 cycles at 8 MHz the minimum crystal Q is 16,000. If you build a 6-pole Chebychev filter with crystal Qs of 150,000 the filter will have over 12 dB of loss. If you have crystals with Q = 320,000 (and that is pretty high), the loss will drop to about 4-5 dB depending on how much ripple you choose.

When the crystals don't have enough Q to neglect it filter design gets a little harder. I refer you to my Fall 1993 Communications Quarterly article and suggest you have your library get a copy of Zverev.

[1] Wes Hayward, W7ZOI, "A Unified Approach to the Design of Crystal Ladder Filters", QST, May 1982 pp 21-27.

[2] Phillip R. Geffe's *BAND* software was reviewed by Ed Wetherhold, W3NQN, in the April 1990 of QEX. Since then the price has become $149 and Phil's address has changed:

Phillip R. Geffe
5095 Country Top Trail
Bethlehem, PA, 18017
(610) 861-7779

[3] Hayward, "Introduction to Radio Frequency Design" by American Radio Relay League, pp 95-100.

[4] Doug DeMaw, W1FB, "A Tester for Crystal F, Q and R", QST May 1990, pp 21-23

[5] Steve Weber, KD1JV Designs
Box 140
Gorham, New Hampshire, 03581
(603) 752-6166

[6] Hayward, " ", QEX
Radio Relay League, pp 95-100.

[7] Bill Carver, "The LC Tester", Communications Quarterly, Winter 1993, pp 11-18.

[8] Amidon, "Iron-Powder And Ferrite Coil Forms", pp 45-48

[9] Bill Carver, "High-Performance Crystal Filter Design", Communications Quarterly, Winter 1993, pp 11-18.

[10] Antatol Zverev, "Handbook of FILTER SYNTHESIS", John Wiley and Sons (1967), pp 312-340

80m 2-pole bandpass filter

Date/Time run: 2/ 1/97 1:05:52 Temperature: 27.0

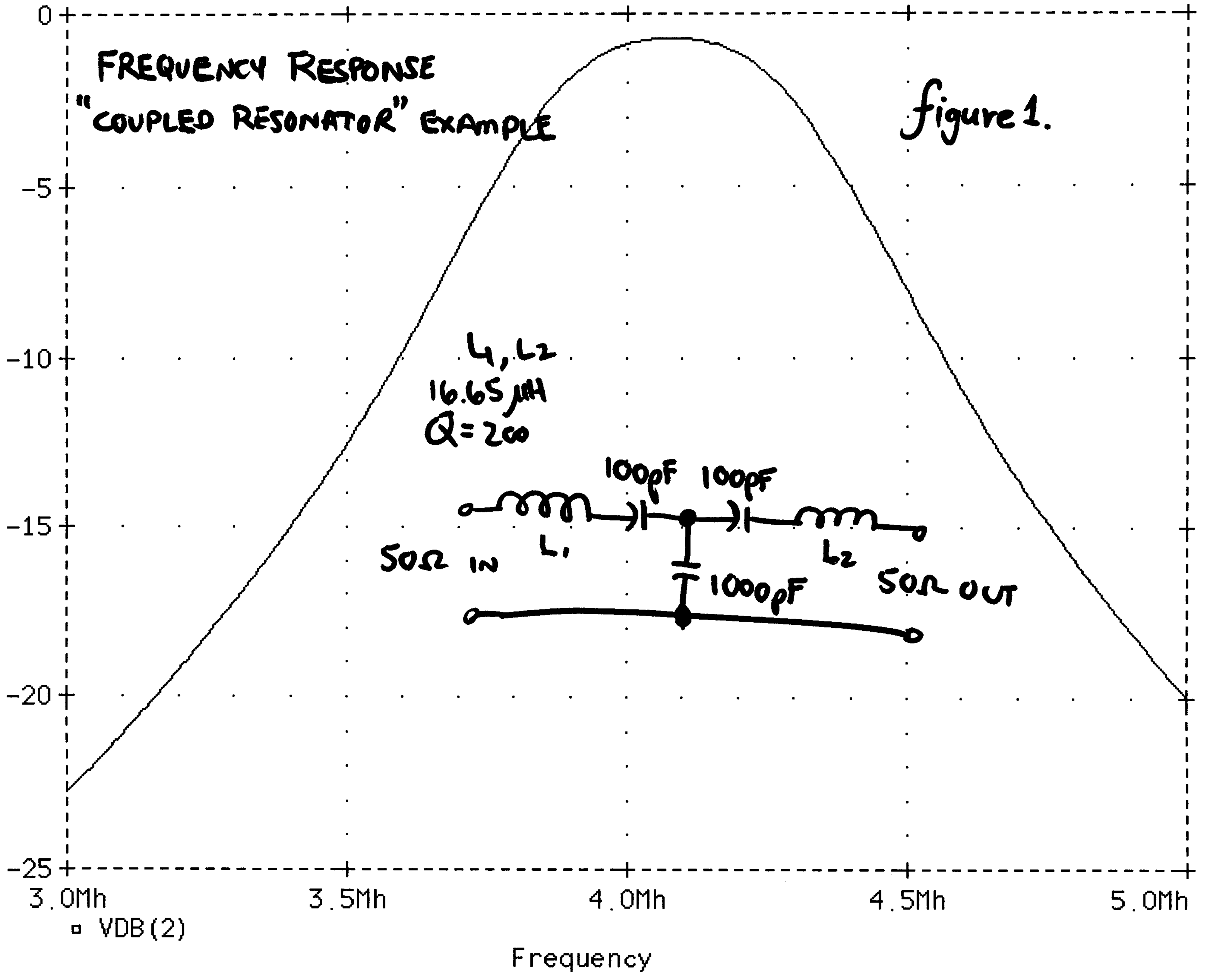
figure 1.

80m 5-pole bandpass filter

Date/Time run: 2/ 1/97 2:11:43 Temperature: 27.0

figure 2

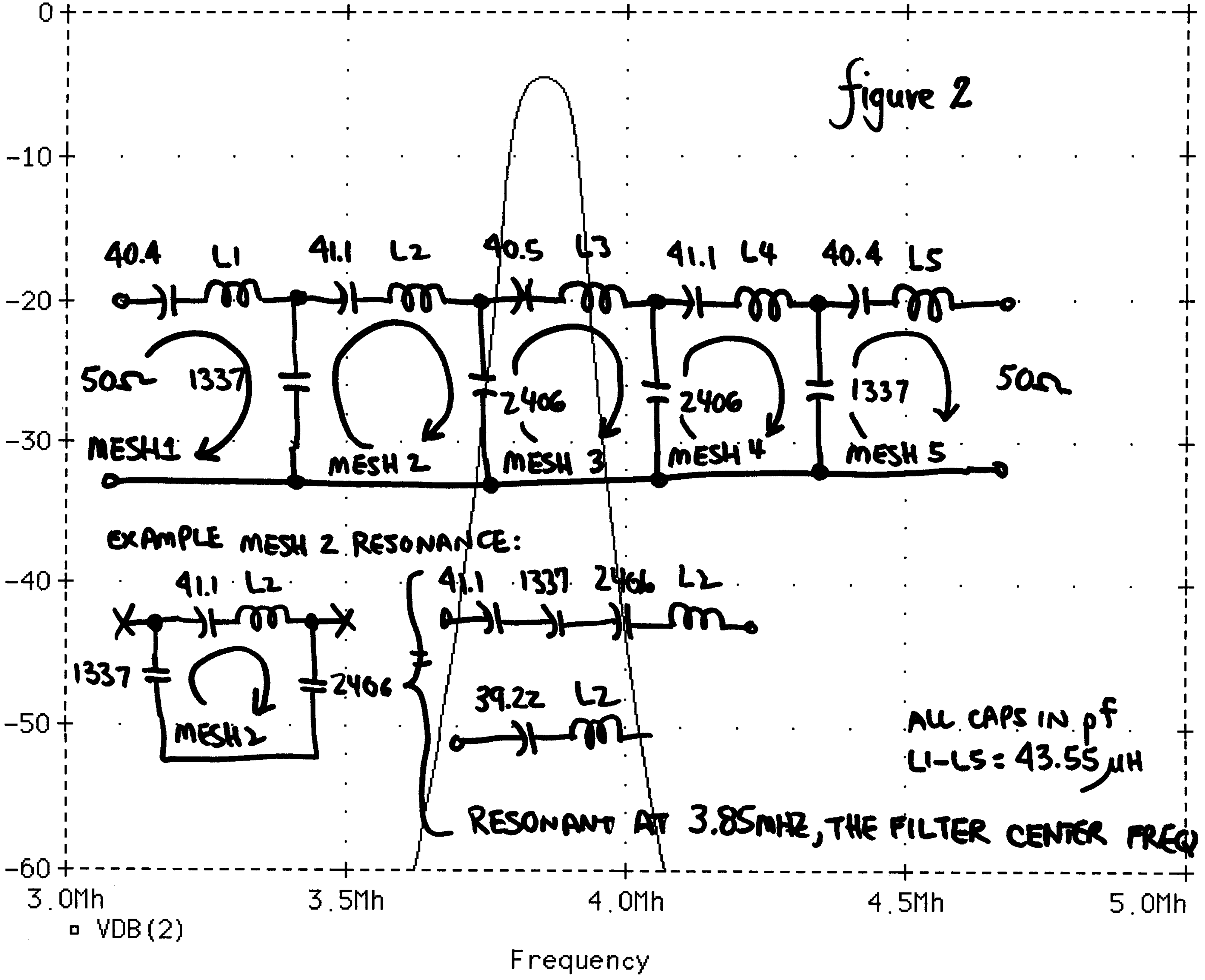

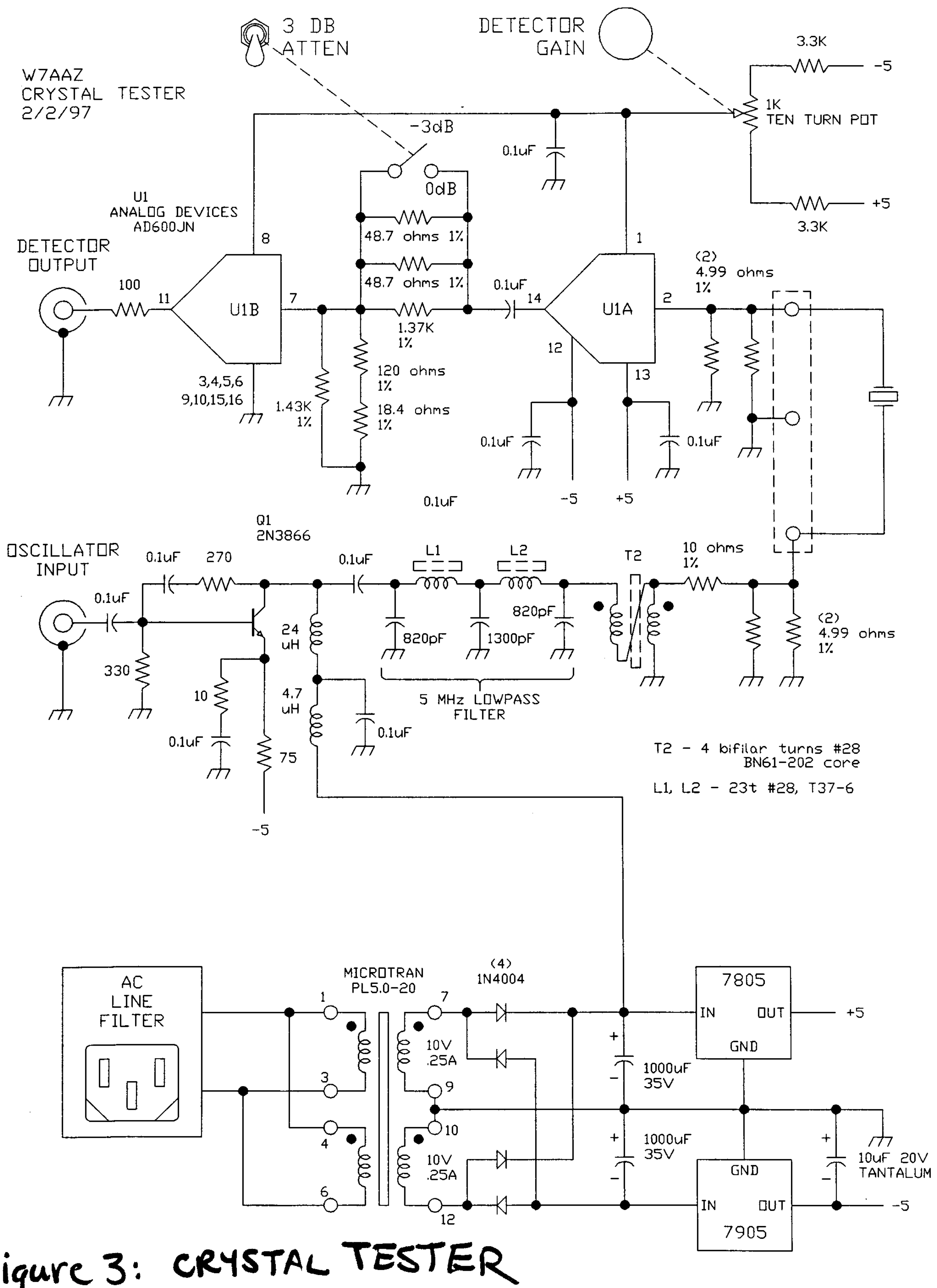

figure 3: CRYSTAL TESTER

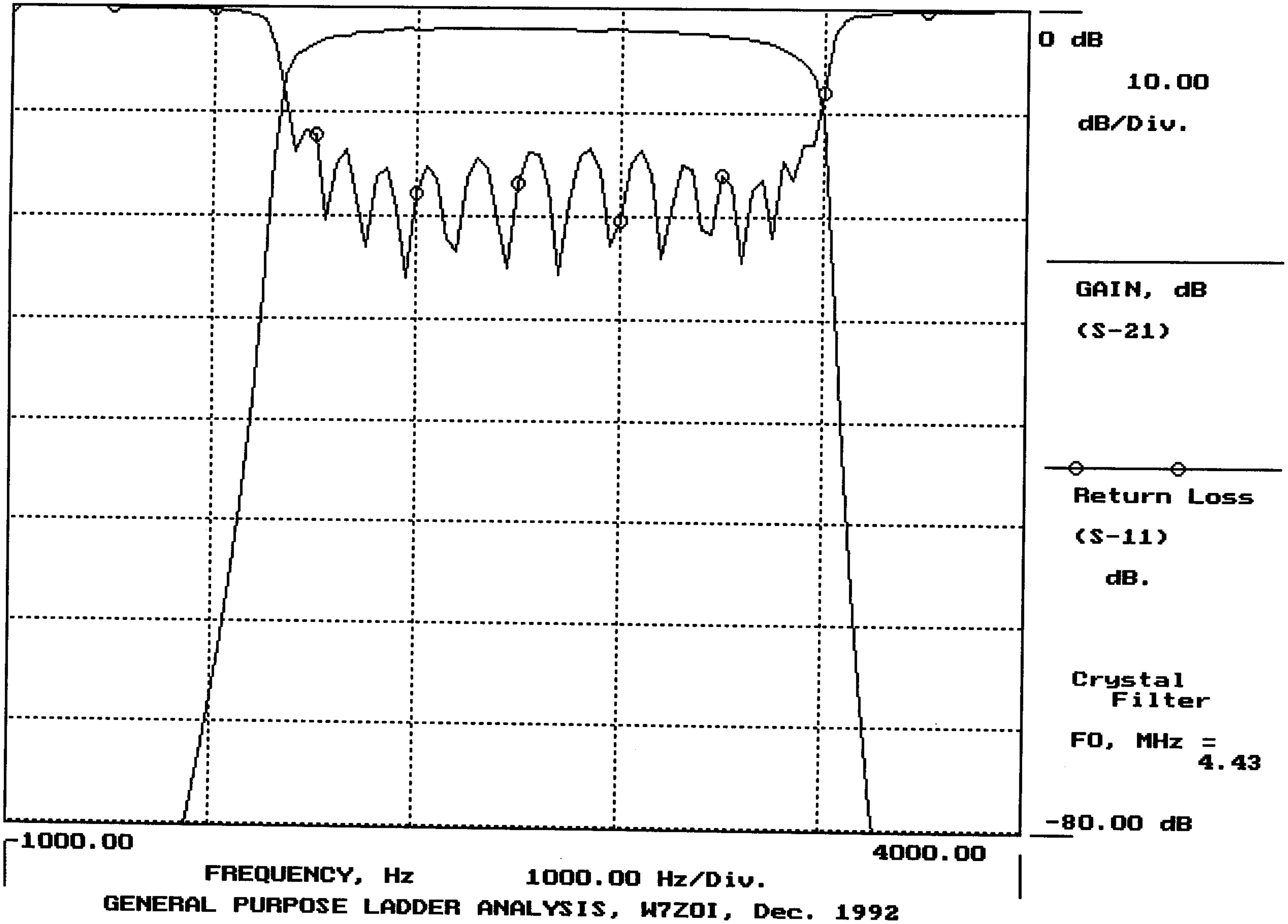

figure 5: Predicted Response of SSB filter

figure 4

MODEL OF 4.434 MHz DIGIKEY CRYSTAL
W7AAZ 1/19/97

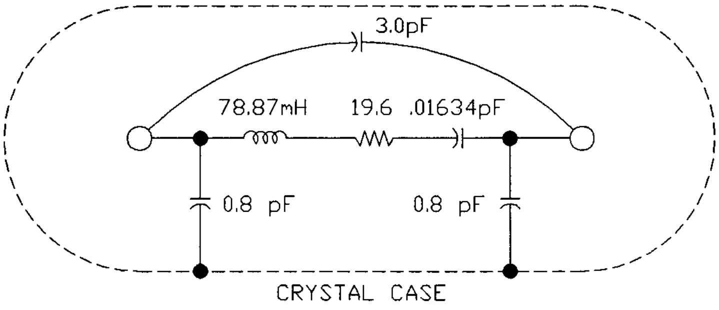

CRYSTAL TESTER CONNECTED
TO CHECK/TUNE A MESH IN THE
BREADBOARD FILTER

figure 6

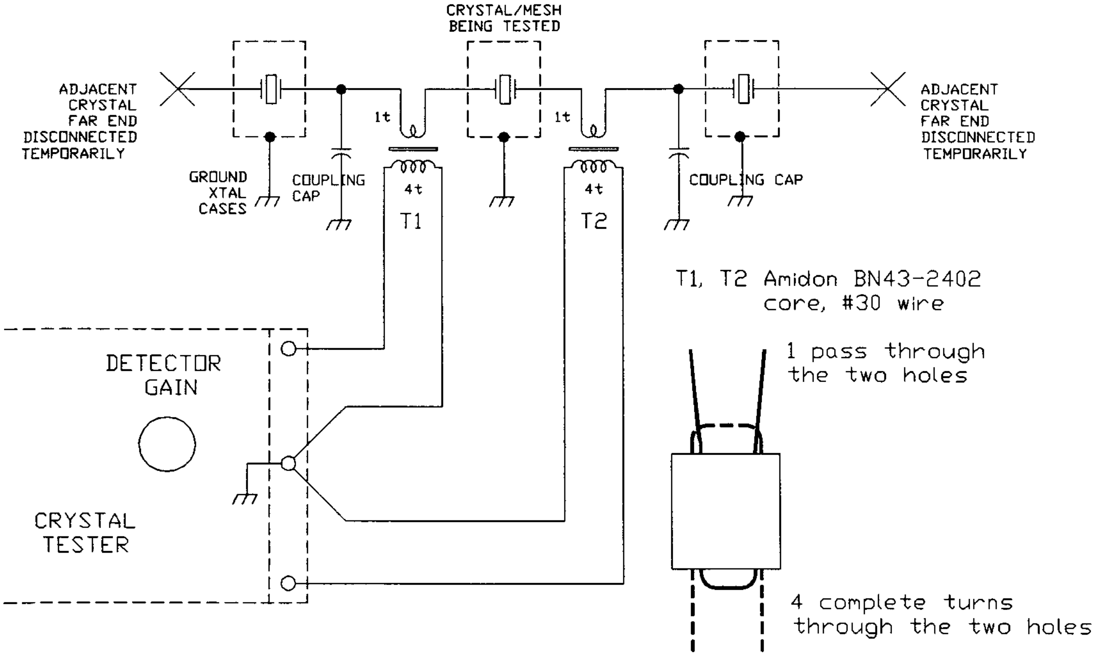

T1, T2 Amidon BN43-2402
core, #30 wire

1 pass through
the two holes

4 complete turns
through the two holes

Design bandwidth = 2.3 KHz

Measured: -3dB 2.23 KHz
-6dB 2.42 KHz
-60 dB 2.89 KHz
-80 dB 3.24 KHz

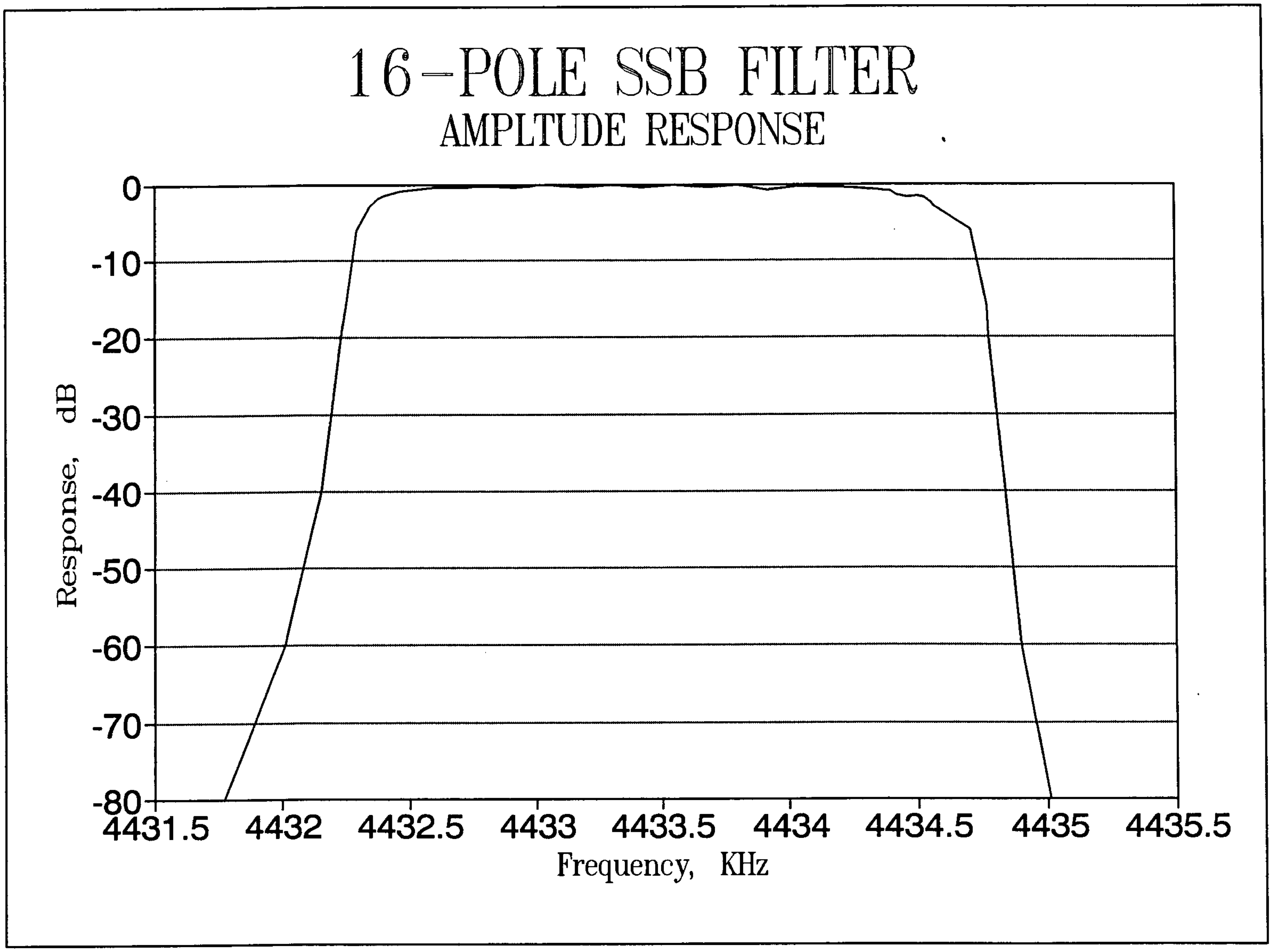

16-POLE SSB FILTER
AMPLTUDE RESPONSE

Statistics: 6:60 dB "shape factor" = 1.19
Insertion loss in 50Ω system 1.8 dB

Completed filter plot figure 7

W7AAZ 1/20/97

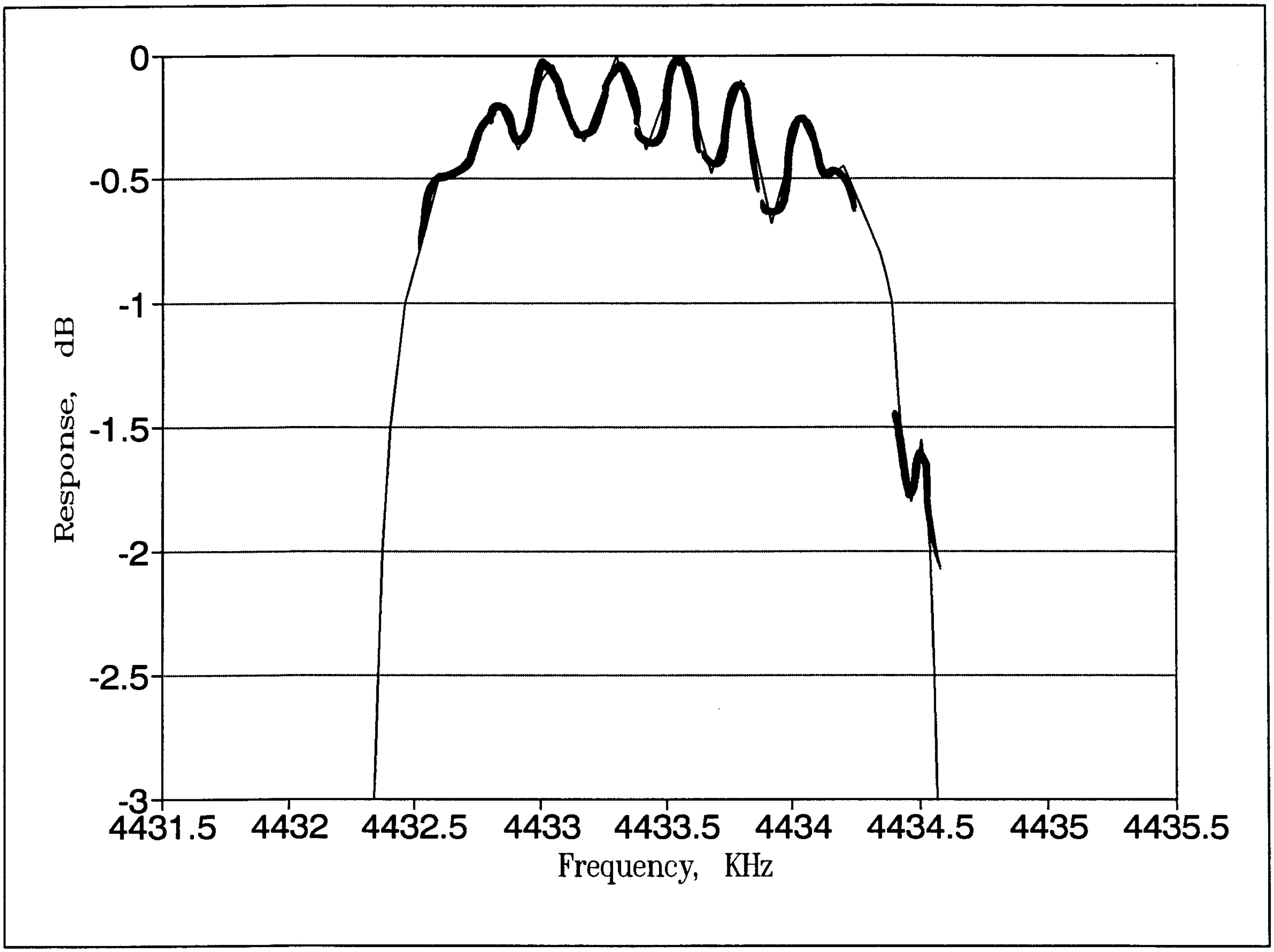

FIRST 3 dB
16 POLE SSB filter
W7AAZ
1/20/97